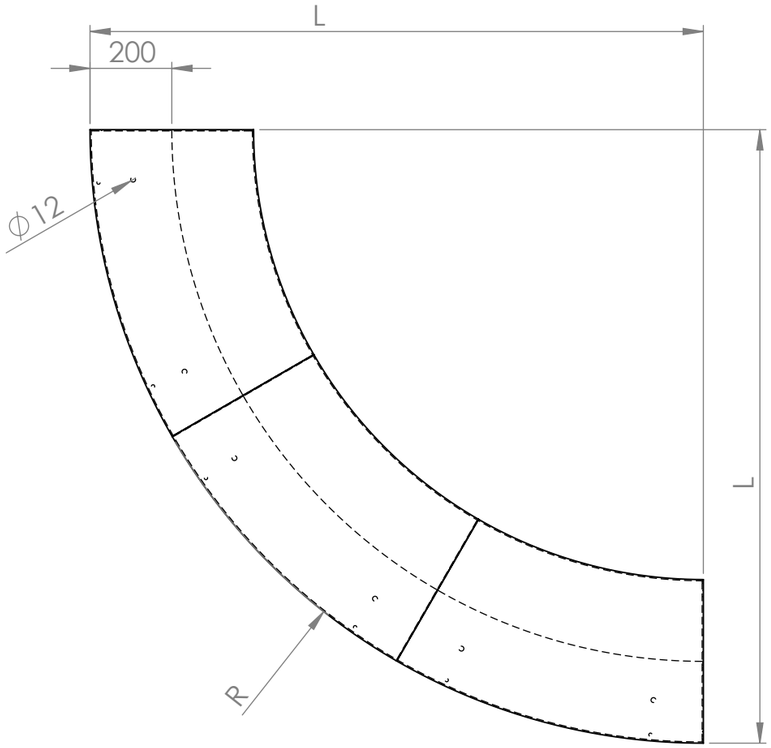

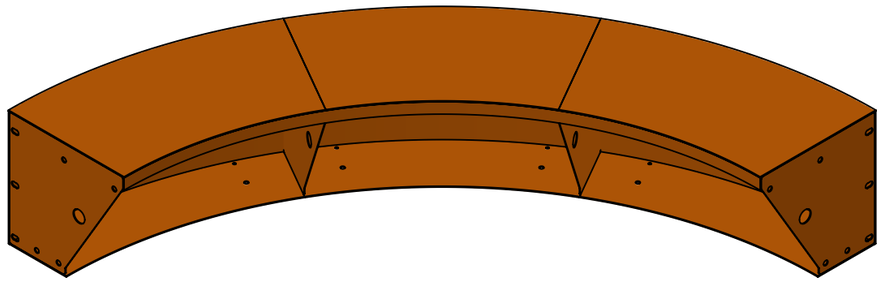

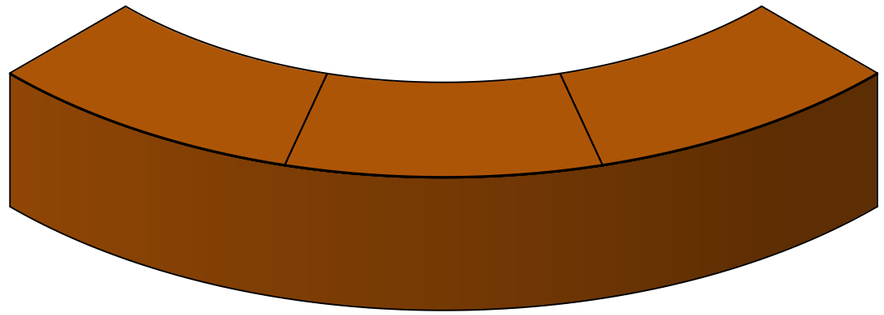

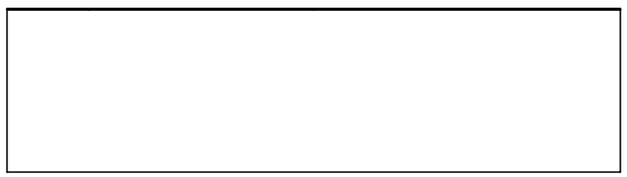

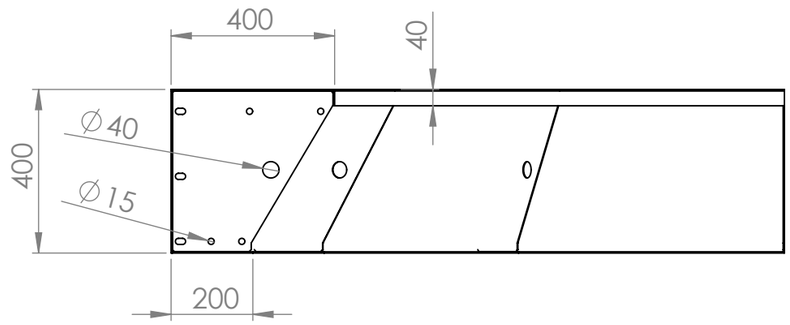

		DATE	
DRAWN		4-7-2024	
REVISION			

TITLE:

Corten 3mm

Drawing. CRCO3_400_1500_400_Wide

A3

Color: -

Mass (kg): **60.82**

SCALE:1:15

SHEET 1 OF 8