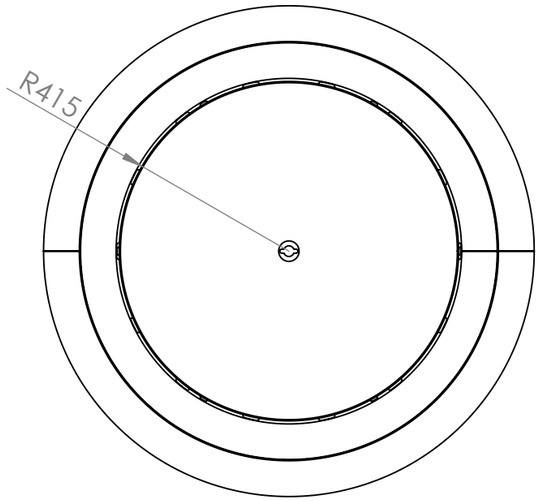

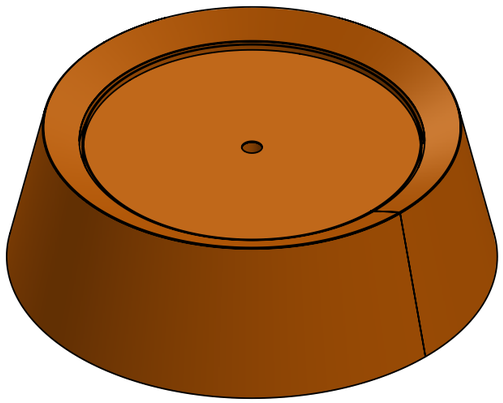

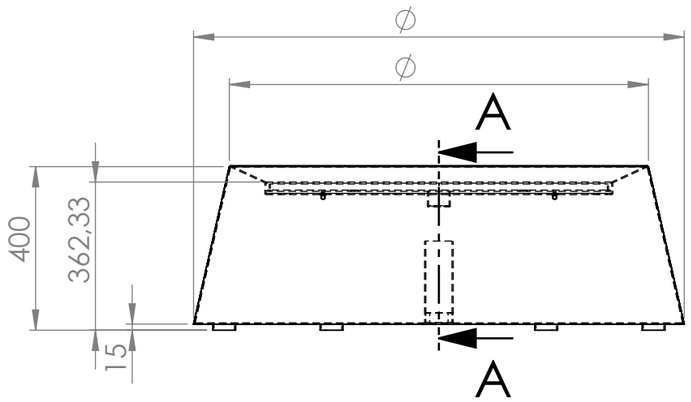

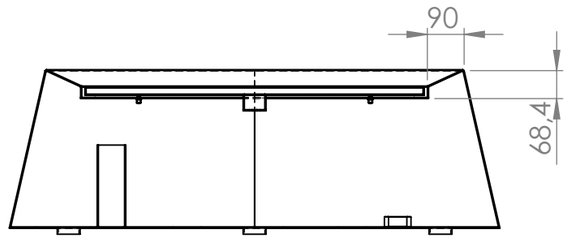

SECTION A-A

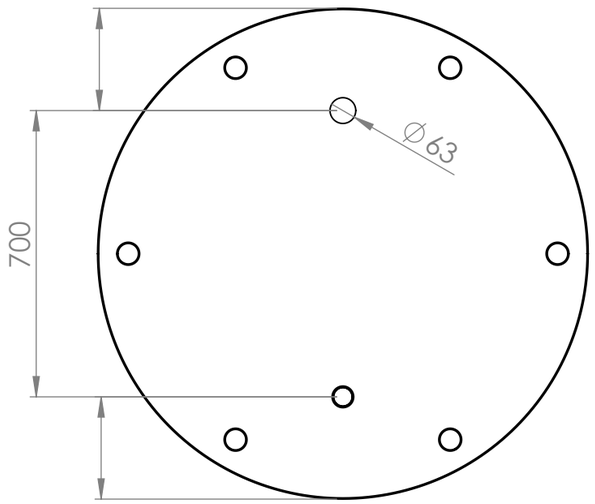

		DATE	
DRAWN		21-4-2026	
REVISION			

TITLE:

3mm Corten

Drawing.

COVE CCOR5

A3

Color: -

Mass (kg): **83.80**

SCALE:1:15

SHEET 1 OF 16